AIRUNO
DESIGNER COOKER HOODS

Salieri Ceiling Hood

Version
900mm – White Glass – AMR20 1330m^3/h

The photo is purely for information it may not correspond to the selected version

FEATURES

White Glass
Remote Control

TECHNICAL FEATURES

Installation type
Ceiling

Dimensions
900mm

Finish
White Glass

Motor
AMR20 – 1330 m^3/h

Type of control
Remote Control

Speed settings
4

Lighting
LED strip – 17w – 3000k

Filter
2 x Metallic filter – 398x150x9mm

PACKAGING

Net weight
16kg

Volume
0.27m^3

Packaging size
Length – 1100 mm
Height – 340 mm
Depth – 730 mm

CONSUMPTION AND CONNECTION FEATURES

Maximum consumption
707W

Current
3A

Voltage
220-240V

MOTOR TECHNICAL DATA
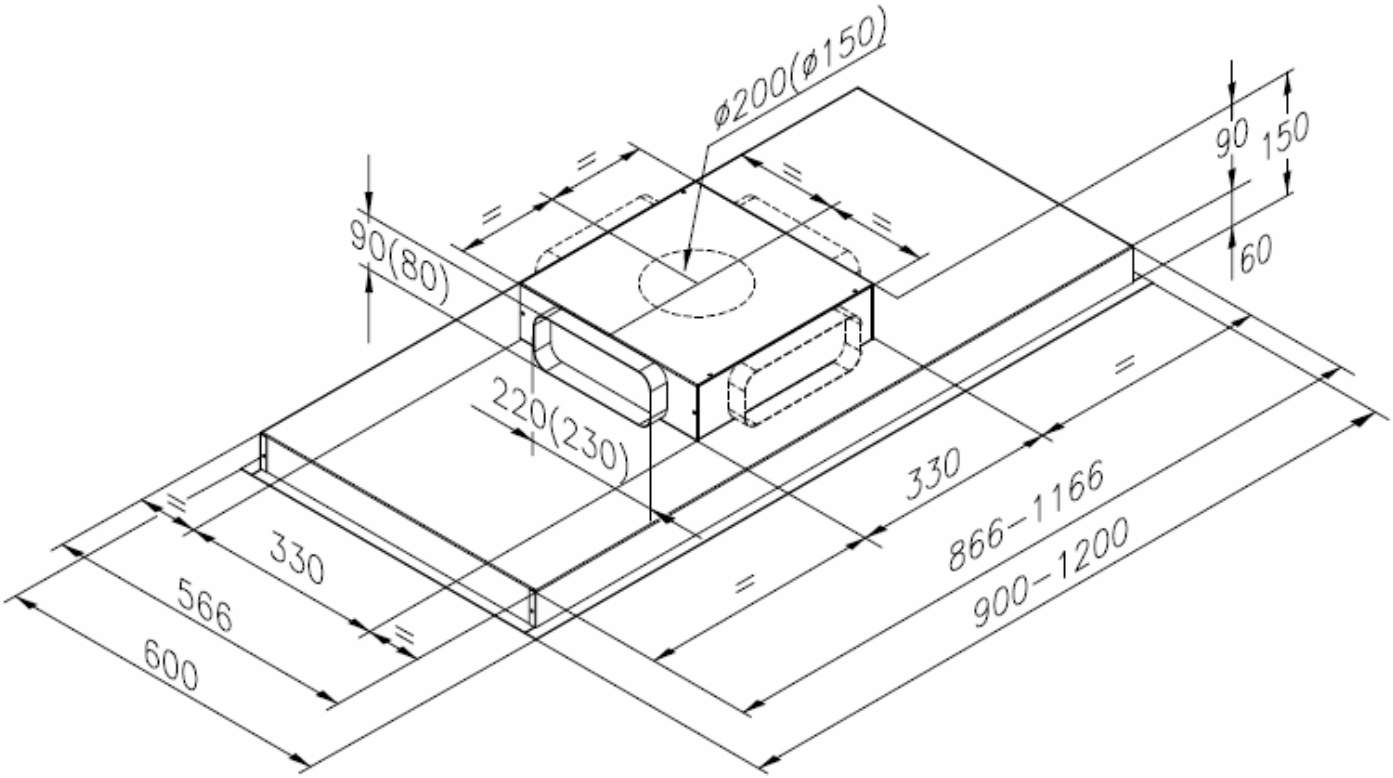
Motor	AMR20
Airflow m^3/h	1330
Pressure Pa	590
Noise db	48-75
Power W	690
Outlet Width mm	200
Energy Class	C